INFORMATION SHEET 10/13/15 TRUSTEES MEETING

ATTACHMENT 4.4

TO: Jim Bridges, Superintendent

FOR: Board of Trustees

FROM: Mindy Maxedon, CBO

ISSUE: RGM Associates Jefferson Change Order #'s and Traina Gymnasium Change Order #'s #021, #029-R1 and #030

Change orders are reviewed weekly and if accepted by the district, are signed by Jim. Once the projects are complete, RGM will prepare a summary of all change orders and show the net effect.

Jefferson Change Orders:

We had no new change orders for Jefferson in September.

The total net charge for all Jefferson change orders is +$446,374.00.

Traina Gymnasium Change Orders:

COR #021:
To provide new storm drain connection, revise roof crickets from wood framed to rigid insulation, and replace roof drains with collector and downspouts per CCD #10. Add two additional roof drains and revise the storm drain connections. This change results in a charge of $6,863.00.

COR #029-R1:
To furnish and install new ductless split system and associated mechanical, plumbing and electrical at room C03 in lieu of ductwork from HVAC rooftop unit. This change results in a charge of $9,352.00.

COR #030:
To relocate existing light pole and footing shown to remain, north 3' feet from block wall and install second relocated light pole in contract to a new location, per emailed dated August 17, 2015. This change results in a charge of $4,557.00.

The net change from the Traina change order #'s listed above is + $20,772.00.

Please note that all change orders are affecting our contingency. No additional budget is required for this change. Including the items above, the total net charge for all Traina change orders is +$50,566.00.

letter

DATE: 09/22/15

TO: Jefferson School District
1219 Whispering Wind Dr.
Tracy, CA 95377

ATTN: James Bridges

RE: Anthony Traina Gym and Performance Center
DSA Appl. #: 02-113192
COR #021

Dear James,

We have reviewed the contractor's pricing on COR #021 to provide new storm drain connection, revise roof crickets from wood framed to rigid insulation, and replace roof drains with collector and downspouts per CCD #10. Add two additional roof drains and revise the storm drain connections.

We find the pricing of $6,863.00 acceptable and recommend Board of Trustee acceptance.

District Authorization: _____
James W. Bridges

Date: 9/22/15

Thank you.

FROM: Nick Morrissey
pjhm architects
Project Manager

CC: Ramon Parocua, RGM
Kenneth Podany, PJHM
File 13

pjhm·architects
OC// 24461 Ridge Route Drive #100 • Laguna Hills CA 92653 P// 949-496-6191
SD// 804 Pier View Way #103 • Oceanside CA 92054 P// 760-730-5527

CHANGE ORDER REQUEST 021

Distribution to:
OWNER ☐
ARCHITECT ☐
CONST. MANAGER ☐
CONTRACTOR ☐
FIELD ☐
OTHER ☐

PROJECT: Anthony Traina Gym and Performance Center
4256 Windsong Drive
Tracy, CA 95377

TO: Nick Morrissey, PJHM Architects

Reference: RFI # ____ PCO # ____ ASI# ____
CCA # ____ CCD # 10 IB# ____

COR NUMBER: 021

DATE: July 1, 2015
PROJECT No.: JES-14-01
CONTRACT FOR: New Gymnasium
CONTRACT DATE: November 1, 2014

Description of work:
Provide new storm drain connection. Revise the roof crickets from wood framed to rigid insulation and replace roof drains with collector box and downspouts per CCD 10. Add two additional roof drains and revise the storm drain connections.

1. Subcontractor Work (mark-up not to exceed 10%)
(Please attached all required backup, quantities, unit cost, etc., associated with work performed.)

1. Costs from Yancey Roofing	$	12,311.31		
2. Costs from Pinasco	$	7,500.00		
3. Costs from D.A. Wood Construction	$	2,505.55		
4. Painting Costs (Allowance)	$	500.00		
5. Pengilly Masonry - Zero Cost	$	-		
6. Credit from Starke for Framed Crickets	$	(16,350.00)		
SUBTOTAL	$	6,466.86		
Contractor mark-up on Sub work (not to exceed 5%)	$	323.34		
		TOTAL - 1	$	6,790.20

2. Work Performed by Prime Contractor
(Please attached all required backup, quantities, unit cost, etc., associated with work performed.)

Materials	$	-		
Labor	$	-		
Equipment	$	-		
SUBTOTAL	$	-		
Prime Contractor OH&P (not to exceed 15%)	$	-		
		TOTAL - 2	$	-
		TOTAL - 1 & 2	$	6,790.20
Bond Premium (actual rate, 1.06%)			$	71.98
TOTAL PROPOSED CHANGE			$	**6,863.00**

Extension of Contract Time Proposed 0 Days.

Prepared by:
Ramon Parocua

Date July 1, 2015

GUDGEL YANCEY CHANGE ORDER BREAK DOWN

GY JOB NAME	Anthony Triana Gym
C.O. Date	5/22/2015
SALESMAN	Joel

TOTAL MAN HRS	TOTAL MAN DAYS	MAN DAY RATE
56.00	7.00	$ 500.00

TRAVEL HOURS	TRAVEL RATE	SUB	SUB RATE	MATERIALS
0.00	$25.00	yes	$36.00	$ 6,890.00

C.O. COST BREAKDOWN:		
LABOR:		$3,500.00
MATERIAL:		$6,890.00
SUBCONTRACTOR		$0.00
EQ. RENTAL		$0.00
TRAVEL WAGES		$0.00
SUBSISTENCE		$252.00
WARRANTY		$0.00
DUMP FEES		$550.00
BOND COSTS		$0.00
MISC. JOB COST		$0.00
FUEL & OIL		$0.00
PROPANE		$0.00
PERMITS/FEES		$0.00
	Mark Up	10%

Total C/O Amount		$12,311.31	%	100.00%
Estiamted C/O Cost	$11,192.10		%	90.91%
Estiamted C/O Profit		$1,119.21	%	9.09%
Original Contract Price	$0.00			
Total Reveised Contract Amount	$12,311			100.00%

CHANGE ORDER NUMBER	2
CHANGE ORDER DESCRIPTION	Upper Roof Crickets

CO Entered Into AC	
Date Mailed	
Date Approved	
Date Approved In AC	

Materials

Item	Quantity	Unit	Unit Cost	Total
Tapered Iso Package	3500	sq ft	$ 1.50	$ 5,250.00
Screws 4"	2	box	$ 135.00	$ 270.00
5"	2	box	$ 155.00	$ 310.00
6"	2	box	$ 195.00	$ 390.00
7"	2	box	$ 210.00	$ 420.00
8"	1	box	$ 250.00	$ 250.00
				$ -
				$ -
				$ -
				$ -
				$ -
				$ -
				$ -
				$ -
				$ -
				$ -
				$ -
				$ -
				$ -
				$ -
				$ -
				$ -
				$ -
				$ -
				$ -
			Total	$ 6,890.00

Labor

Task	Hours
Labor install tapered crickets	56
Total	56

PINASCO
MECHANICAL CONTRACTOR
PO Box 55287
Stockton, Ca 95205
Plumbing • HVAC • Fire Protection • Repairs
Stockton: (209) 463-7793 Contractors License No. 429901 FAX: (209) 463-3224

Written By: Peter Pinasco Email: petepinasco@yahoo com

Change Order

(revised 5-27-15)

Date: May 12, 2015

Project: **Anthony Traina School**
Jefferson School District
Tracy, Ca

Re: CCD #10

Notes: To replace roof drains with downspouts per detail SKA-1 through SKA-5, SKA-2 detail #8 & SKP-8. Add two additional roof drains and revise the storm drain connections.

Base Bid : **$7,500.00**
(additional alternate)

Exclusions:

1. Fees, permits and any administrative bonds
2. Painting or electrical
3. Concrete removal and replacement

Right to Cancel
You, the buyer, may cancel this transaction at any time prior to midnight of the third business day after the date of this transaction.

Note: This proposal may be withdrawn by us if not accepted within: 90 Days Date of Acceptance:_____Signature:_____

D. A. Wood Construction, Inc
P.O. Box 1810
Empire CA 95319
209-491-4970

License: 816079

Change Order

Order#: 8

Order Date: 05/14/2015

To: RGM and Associates
3230 Monument Way
Concord CA 94518

Project: 1429
14-29 Anthony Traina
4256 Windsong Dr.
Tracy CA 95377

The contractor agrees to perform and the owner agrees to pay for the following changes to this contract.

Plans Attached ☐

Ordered By: 329 Dan Wood, Jr. **Customer Order:**

Specifications Attached ☐

Description of Work	Amount
CCD# 10 Storm Changes Provide Storm Changes Per CCD#10 Break and Enter Catch Basin and add 14' Pipe.	2,505.55

Notes

Negative changes will lower the overall contract price requiring no additional payment by owner.

Requested Amount of Change 2,505.55

The original Contract Sum was	116,224.00
Net change by previous Change Orders	20,736.93
The Contract Sum prior to this Change Order	136,960.93
The Contract Sum will be changed by this Change Order	2,505.55
The new Contract Sum including this Change Order will be	139,466.48
The Contract Time will be changed by	0 Days

Owner: _____ Date: _____

Contractor: _____ Date: _____

(209) 491-4970
Fax (209) 491-4971
Lic. No. 816879

D.A. Wood
Construction Inc.

P.O. Box 1810
Empire, CA 95319

DATE:	5/14/2015			
JOB #				
RPRT#				
WORK ORDER :				

SKC -1

DATE	CRAFT	NAME	RATE	HRS	TOTAL WAGES	MATERIAL DESCRIPTION	UNIT	UNIT COST	TOTAL
		K. Porter		6.00	$ 484.75	groeniger	1.00	$ 25.00	$ 25.00
		W. Thompso		6.00	$ 352.91	grout	2.00	$ 5.00	$ 10.00
				-	$ -		-	$ -	$ -
				-	$ -		-	$ -	$ -
		J. Sanchez		5.00	$ 395.00		-	$ -	$ -
				-	$ -		-	$ -	$ -
				-	$ -		-	$ -	$ -
				-	$ -		-	$ -	$ -
				-	$ -		-	$ -	$ -
				-	$ -		-	$ -	$ -
				-	$ -		-	$ -	$ -
				-	$ -	8.375%		$ -	$ -
				-	$ -	Tax	0.251		$ 2.93
		TOTAL			$ 1,232.66		TOTAL		$ 37.93

DATE	Cal Trans Code	EQUIPMENT	RATE	HRS	TOTAL AMNT		SUMMARY	
		Crewtruck		4.00	$ 141.56	WAGES PAID		1232.66
		Backhoe		4.00	$ 254.88		0.00%	0.00
				-	$ -	SUBSISTENCE	0	0.00
		10 Wheeler		5.00	$ 353.00	TRAVEL	0	0.00
				-	$ -		SUBTOTAL	1232.66
				-	$ -	MARKUP %	33.0%	406.78
				-	$ -		TOTAL LABOR	1639.44
				-	$ -	MATERIAL		37.93
				-	$ -	EQUIPMENT		749.44
				-	$ -		SUBTOTAL	787.37
				-	$ -	MARKUP %	10.0%	78.74
				-	$ -		TOTAL M+E	866.11
		TOTAL			$ 749.44	SUBS		0.00

DATE	SUBCONTRACTOR		UNIT	COST	TOTAL	MARKUP %	10.0%	0.00
			-	-	0.00		TOTAL SUBS	0.00
			-	-	0.00	Sub Total		2505.55
			-	-	0.00	Bond	0.00%	0.00
			-	-	0.00		TOTAL	2505.55
		TOTAL			0.00			

Ramon Parocua

From: Chris Pengilly [pengillymasonry@yahoo.com]
Sent: Tuesday, June 02, 2015 8:16 AM
To: Ramon Parocua
Subject: Re: Anthony Traina Gym - Response for RFI #94

Ramon

As long as there are no special rebar assemblages to add or tie and blockouts are provided this shouldn't slow work down and there won't be any added cost.

Thanks,

Chris Pengilly
Pengilly Masonry, INC
747 Wilshire Ave., Unit B
Stockton, CA 95203

PH 209.467.7722
FX 209.467.7706

From: Ramon Parocua <Ramon@rgmassociates.com>
To: Mike Pengilly <pengmas@sbcglobal.net>; Chris Pengilly <pengillymasonry@yahoo.com>
Cc: Gino Elliott <gino@rgmassociates.com>; Judy Novero <judy@rgmassociates.com>; Jeff Gilchrist <Jeff@rgmassociates.com>; Marc Hunter <Marc@rgmassociates.com>
Sent: Tuesday, June 2, 2015 7:58 AM
Subject: RE: Anthony Traina Gym - Response for RFI #94

Hi Mike,

I'm following up on the pricing for the CMU wall penetrations per CCD 10 and RFI 94 Please provide

Thank you,
Ramon

From: Ramon Parocua
Sent: Thursday, May 28, 2015 10:28 AM
To: Mike Pengilly; 'Chris Pengilly'
Cc: Gino Elliott; Judy Novero; Jeff Gilchrist; Marc Hunter
Subject: FW: Anthony Traina Gym - Response for RFI #94

Mike,

Starke Structures Inc.
2200 Pine View Way, Suite A
Petaluma, CA 94954

Ph # 707-765-9933
Fax # 707-765-0233
Lic #673132

Change Order #5

Job: Anthony Traina Gym
4256 Windsong Dr.
Tracy, CA 95377

Contractor: RGM & Associates
3230 Monument Way
Concord, CA 94518

Reference: Email response

Description: Credit for not providing wood framed crickets at high roof

Credit **($16,350.00)**

DSA 140

APPLICATION FOR APPROVAL OF CONSTRUCTION CHANGE DOCUMENT - CCD CATEGORY A

CCD Category A is for construction changes to or affecting Structural Safety, Fire Life Safety or Accessibility.

This form shall be completed by the Design Professional in General Responsible Charge of the project, in accordance with California Code of Regulations, Title 24, Part 1, Section 4-338 (c) and in compliance with DSA IR A-6.

School District/Owner: Jefferson School District	DSA File #: 39 - 39
Project Name/School: Anthony Traina Gymnasium	DSA App. #: 02 - 113342

APPLICANT			
CCD #: 10	Date Submitted: 5/8/15	Attached Pages?: ☐No ☒Yes (14 pages)	
Firm Name: PJHM Architects		Contact Name: Nick Morrissey	
Email: nick@pjhm.com		Phone Number: (949) 496-6191	
Address: 24461 Ridge Route Drive, Suite 100			
City: Laguna Hills		State: CA	Zip:92653

DESIGN PROFESSIONAL IN GENERAL RESPONSIBLE CHARGE	
Name of Design Professional in General Responsible Charge: Kenneth J. Podany	
Professional License #: C28889	Discipline: Architect

Design Professional in General Responsible Charge Statement: The attached Construction Change Documents have been examined by me for design intent and appear to meet the appropriate requirements of Title 24, California Code of Regulations and the project specifications. They are acceptable for incorporation into the construction of the project.

Signature: _____

DESIGN PROFESSIONAL IN GENERAL RESPONSIBLE CHARGE

CHECK THIS BOX: ☐ To confirm that all CCD drawings and calculations have been stamped and signed by the Responsible Design Professional.

Brief Description of construction change (attach additional sheets if needed):

Provide new storm drain connection per SKC-1. Revise the roof crickets from wood framed to rigid insulation and replace roof drains with collector box and downspouts per SKA-1 through SKA-5 . Add two additional roof drains and revise the storm drain connections per P-1 through P-8.

List of DSA approved drawings affected by this CCD: C-4.0, A-5.0, A-5.1, A-6.0, P-2.1 and P-2.2

DSA USE ONLY						
Group	Status			Reviewed by	Approved by	Date
SSS	☐ Approved	☐ Not Approved	☐ Not Required			
FLS	☐ Approved	☐ Not Approved	☐ Not Required			
ACS	☐ Approved	☐ Not Approved	☐ Not Required			
STATUS OF CCD:	☐ Approved			☐ Disapproved (resubmittal is required)		

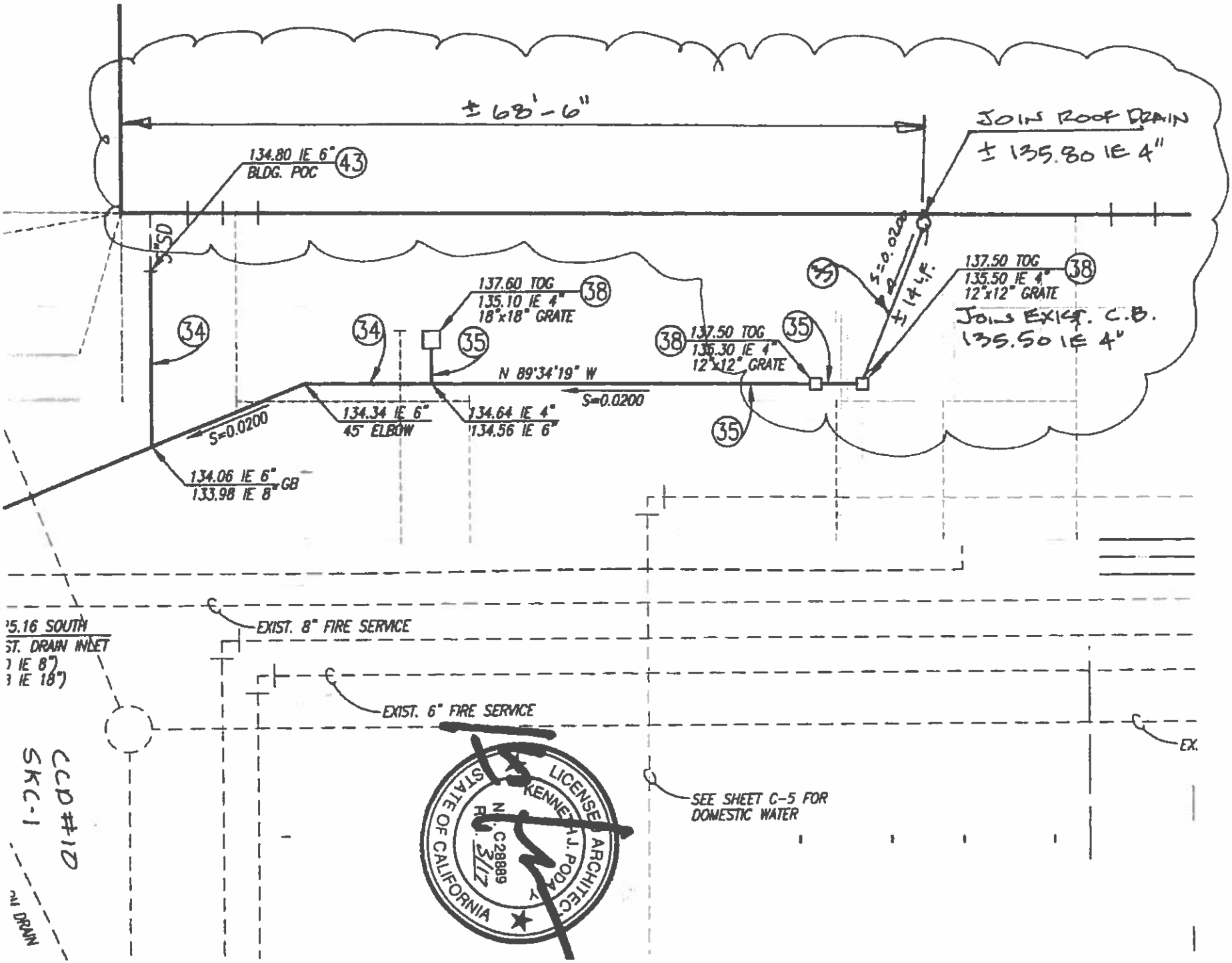
± 68'-6"
JOIN ROOF DRAIN
± 135.80 IE 4"
134.80 IE 6"
BLDG. POC
43
SD
34
137.60 TOG
135.10 IE 4"
18"x18" GRATE
38
35
N 89°34'19" W
S=0.0200
137.50 TOG
136.30 IE 4"
12"x12" GRATE
S=0.0200
±14 L.F.
137.50 TOG
135.50 IE 4"
12"x12" GRATE
JOIN EXIST. C.B.
135.50 IE 4"
134.34 IE 6"
45° ELBOW
134.64 IE 4"
134.56 IE 6"
134.06 IE 6"
133.98 IE 8"
GB
EXIST. 8" FIRE SERVICE
EXIST. 6" FIRE SERVICE
SEE SHEET C-5 FOR
DOMESTIC WATER
STATE OF CALIFORNIA
LICENSE
KENNETH J. PODA
ARCHITECT
C28889
CCD #10
SKC-1

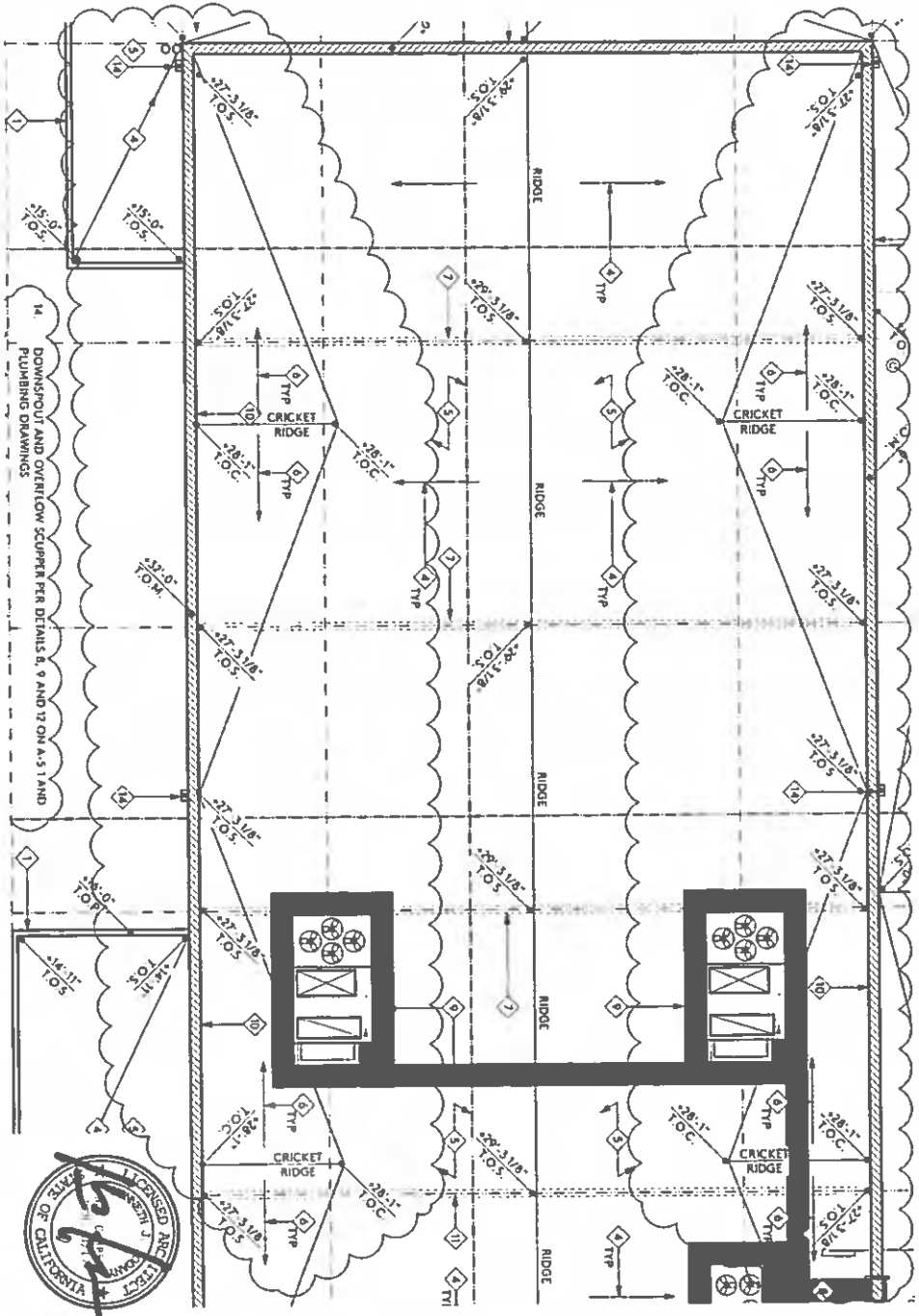

ROOF PLAN

SCALE 1/8" = 1'-0"

SKA-1

CCD-10

ANTHONY TRAINA SCHOOL
GYMNASIUM AND
PERFORMANCE CENTER BUILDING

JEFFERSON SCHOOL DISTRICT

pjhm architects

OC: 24461 Ridge Route Drive #110 Laguna Hills, CA 92653 • p: 949.496.6191 • SD: 804 Pier View Way #103, Oceanside, CA 92054 • p: 760.730.5527 • www.pjhm.com

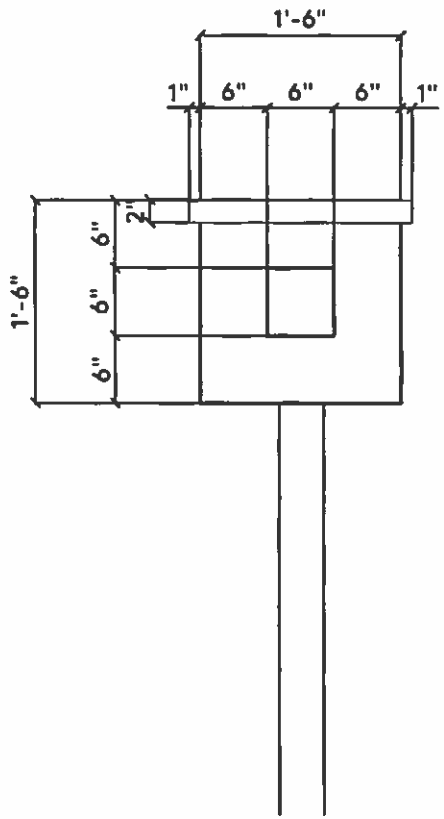

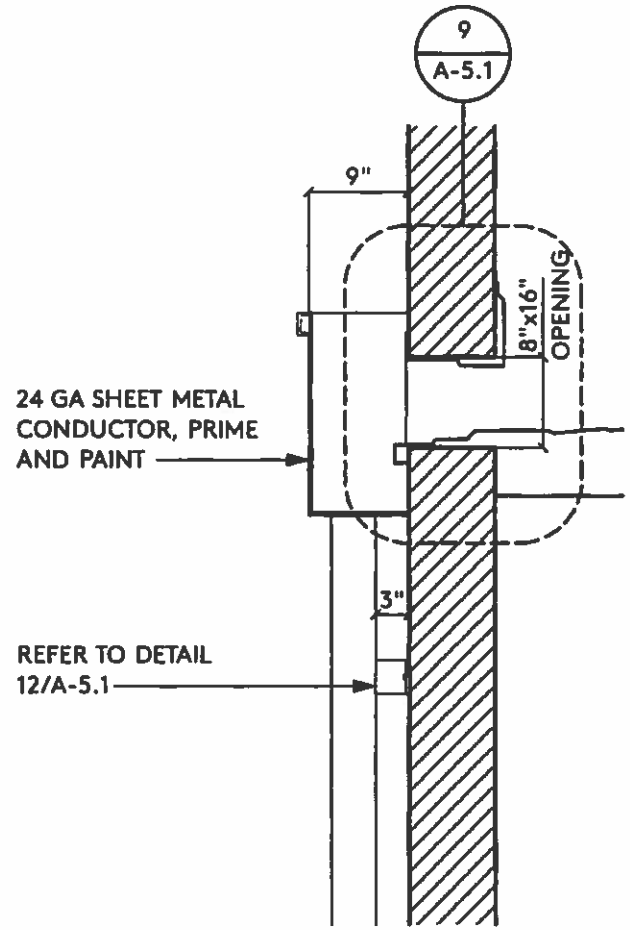

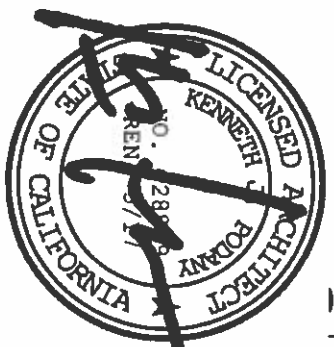

F DRAIN CONDUCTOR 8

ROOF DETAILS

SKA-2 | CCD-10

ANTHNOY TRAINA SCHOOL
GYMNASIUM AND
PERFORMANCE CENTER BUILDING

JEFFERSON SCHOOL DISTRICT

pjhm architects

OC: 24461 Ridge Route Drive #110, Laguna Hills, CA 92653 • p: 949.496.6191 • SD: 804 Pier View Way #103, Oceanside, CA 92054 • p: 760.730.5527 • www.pjhm.com

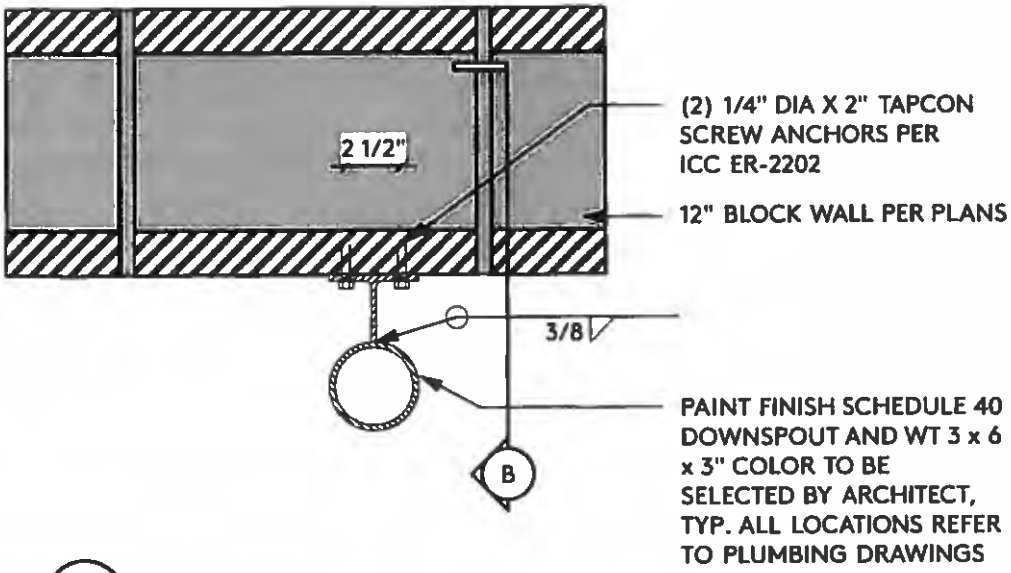

A PLAN ATTACHMENT

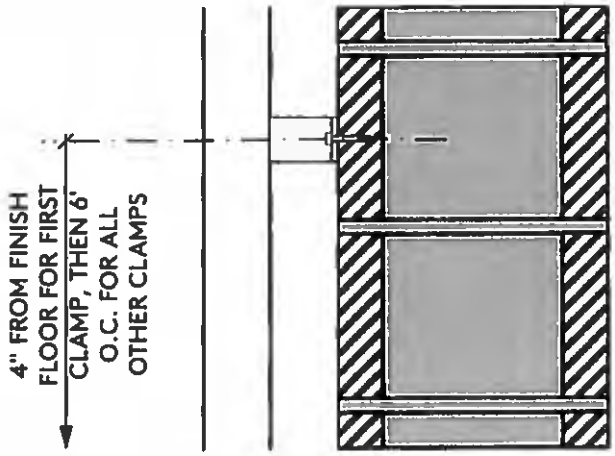

B SECTION

ROOF DOWNSPOUT 12

LICENSED ARCHITECT
KENNETH J. PODANY
STATE OF CALIFORNIA

pjhm architects

ANTHNOY TRAINA SCHOOL
GYMNASIUM AND
PERFORMANCE CENTER BUILDING
JEFFERSON SCHOOL DISTRICT

ROOF DETAILS

CCD-10

SKA-3

OC: 24461 Ridge Route Drive #110, Laguna Hills, CA 92653 • p: 949.496.6191 • SD: 804 Pier View Way #103, Oceanside, CA 92054 • p: 760.730.5527 • www.pjhm.com

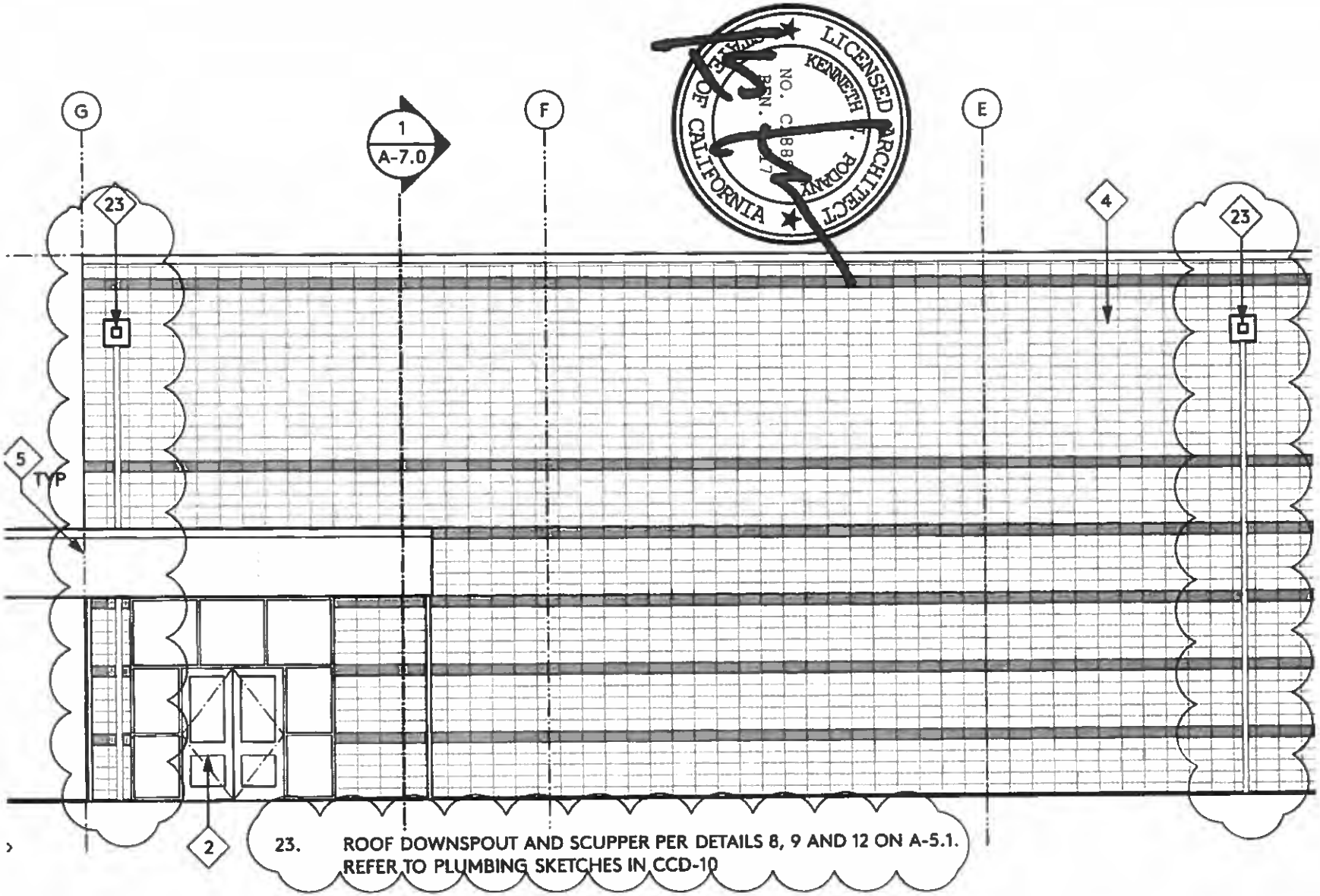

SKA-4

CCD-10

EXTERIOR ELEVATIONS

ANTHNOY TRAINA SCHOOL
GYMNASIUM AND
PERFORMANCE CENTER BUILDING

JEFFERSON SCHOOL DISTRICT

pjhm architects

OC: 24461 Ridge Route Drive #110, Laguna Hills, CA 92653 • p: 949.496.6191 • SD: 804 Pier View Way #103, Oceanside, CA 92054 • p: 760.730.5527 • www.pjhm.com

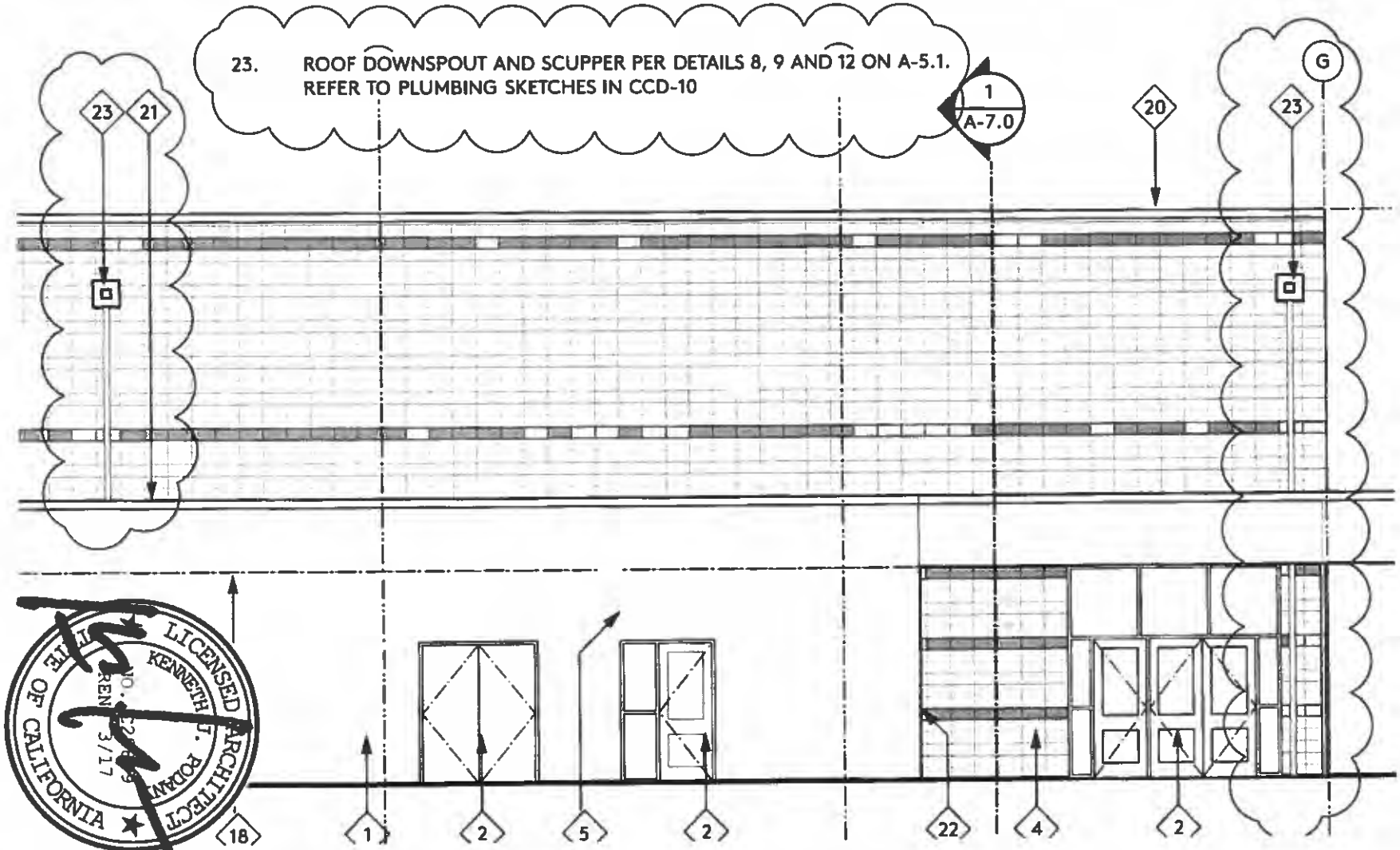

SKA-5

CCD-10

EXTERIOR ELEVATIONS

ANTHNOY TRAINA SCHOOL
GYMNASIUM AND
PERFORMANCE CENTER BUILDING

JEFFERSON SCHOOL DISTRICT

pjhm architects

OC: 24461 Ridge Route Drive #110, Laguna Hills, CA 92653 • p: 949.496.6191 • SD: 804 Pier View Way #103, Oceanside, CA 92054 • p: 760.730.5527 • www.pjhm.com

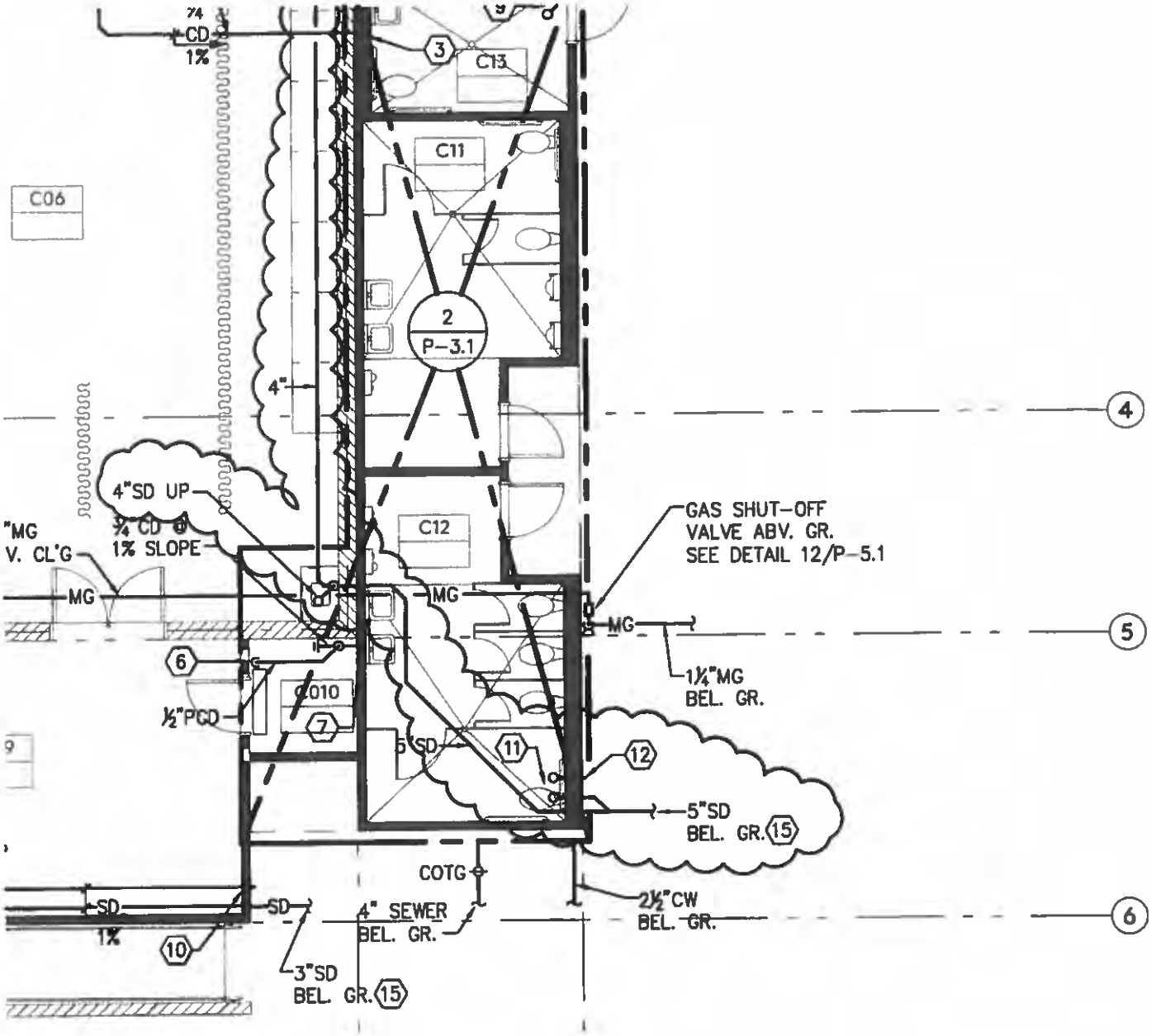

tk1sc
COLLABORATIVE

11870 Pierce Street, Suite 160
Riverside, California 92505
951.299.4160 www.tk1sc.com

REGISTERED PROFESSIONAL ENGINEER
LARRY SUN
No. M25633
EXP. 09-30-16
MECHANICAL
STATE OF CALIFORNIA

pjhm architects

San Diego:
Oceanside, CA
p 760.730.9627 f 760.730.9627

Orange County:
Laguna Hills, CA
p 949.499.6181 f 949.499.0399

ANTHONY TRAINA SCHOOL GYMNASIUM AND PERFORMANCE CENTER BUILDING JEFFERSON SCHOOL DISTRICT			DESCRIPTION: P-2.1
All	DATE	SCALE	SHEET:
02-113342	05/08/15	1/8"=1'-0"	SKP-1

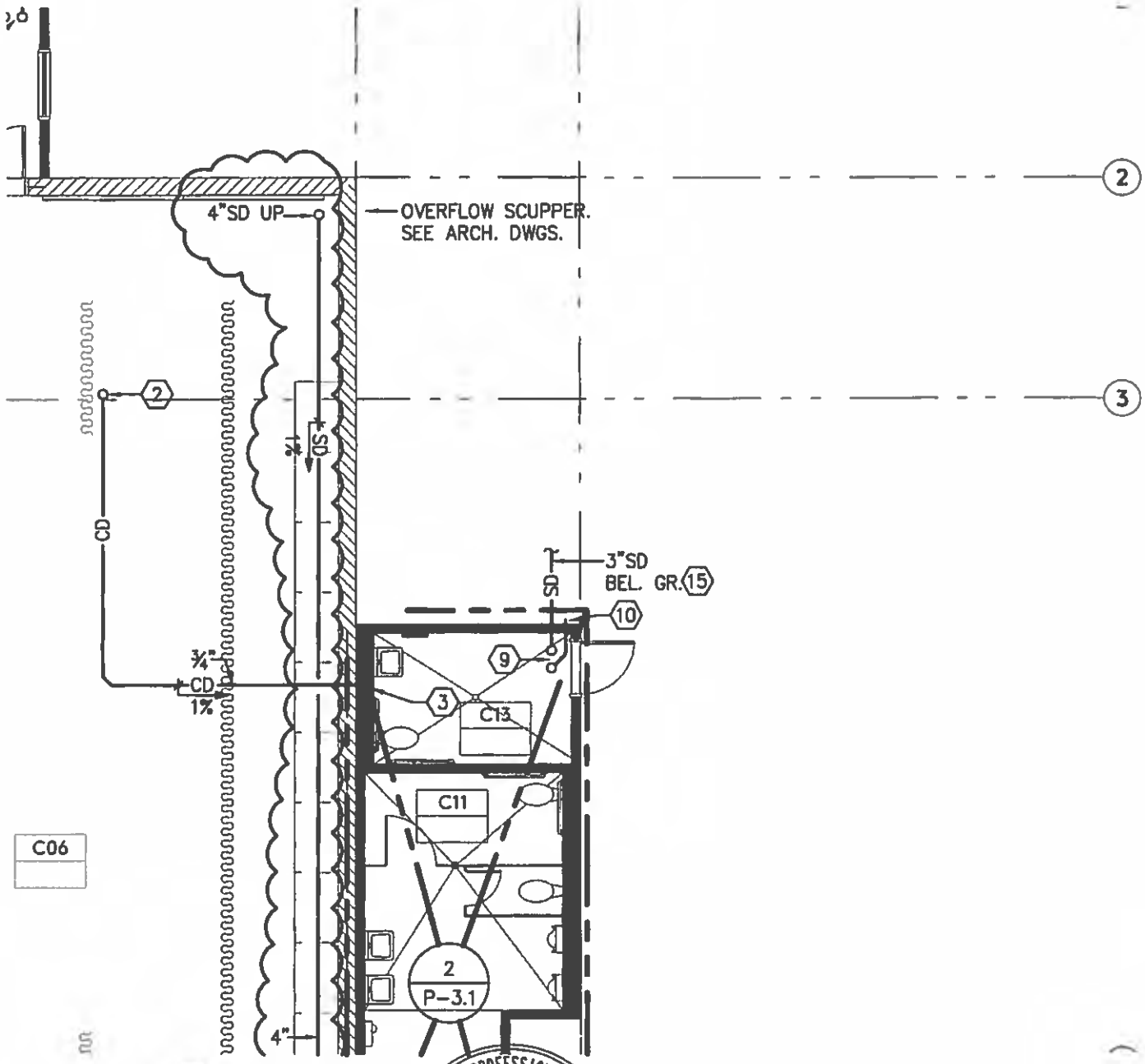

tk1sc
COLLABORATIVE
11870 Pierce Street, Suite 160
Riverside, California 92505
951.299.4160 www.tk1sc.com

REGISTERED PROFESSIONAL ENGINEER
LARRY SUN
No. M25633
EXP. 09-30-16
MECHANICAL
STATE OF CALIFORNIA

pjhm architects
San Diego:
Orange County:

ANTHONY TRAINA SCHOOL GYMNASIUM AND PERFORMANCE CENTER BUILDING

JEFFERSON SCHOOL DISTRICT

A#	DATE	SCALE
02-113342	05/08/15	1/8"=1'-0"

DESCRIPTION: P-2.1

SHEET: SKP-2

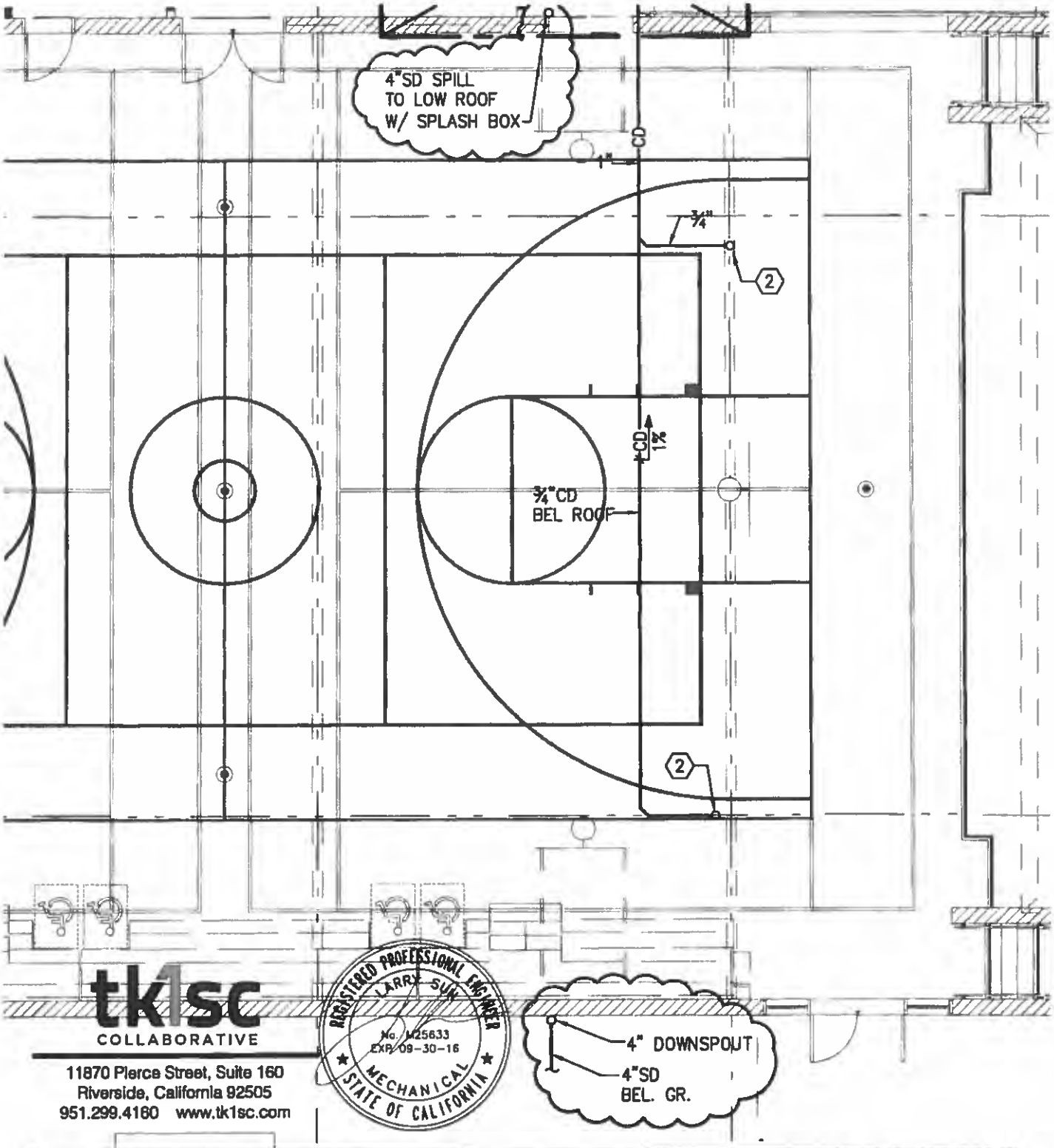

tk1sc
COLLABORATIVE
11870 Pierce Street, Suite 160
Riverside, California 92505
951.299.4160 www.tk1sc.com

REGISTERED PROFESSIONAL ENGINEER
LARRY SUN
No. M25633
EXP. 09-30-16
MECHANICAL
STATE OF CALIFORNIA

pjhm
architects
San Diego:
Orange County:

ANTHONY TRAINA SCHOOL GYMNASIUM AND PERFORMANCE CENTER BUILDING

JEFFERSON SCHOOL DISTRICT

A#	DATE	SCALE
02-113342	05/08/15	1/8"=1'-0"

DESCRIPTION: P-2.1

SHEET: SKP-3

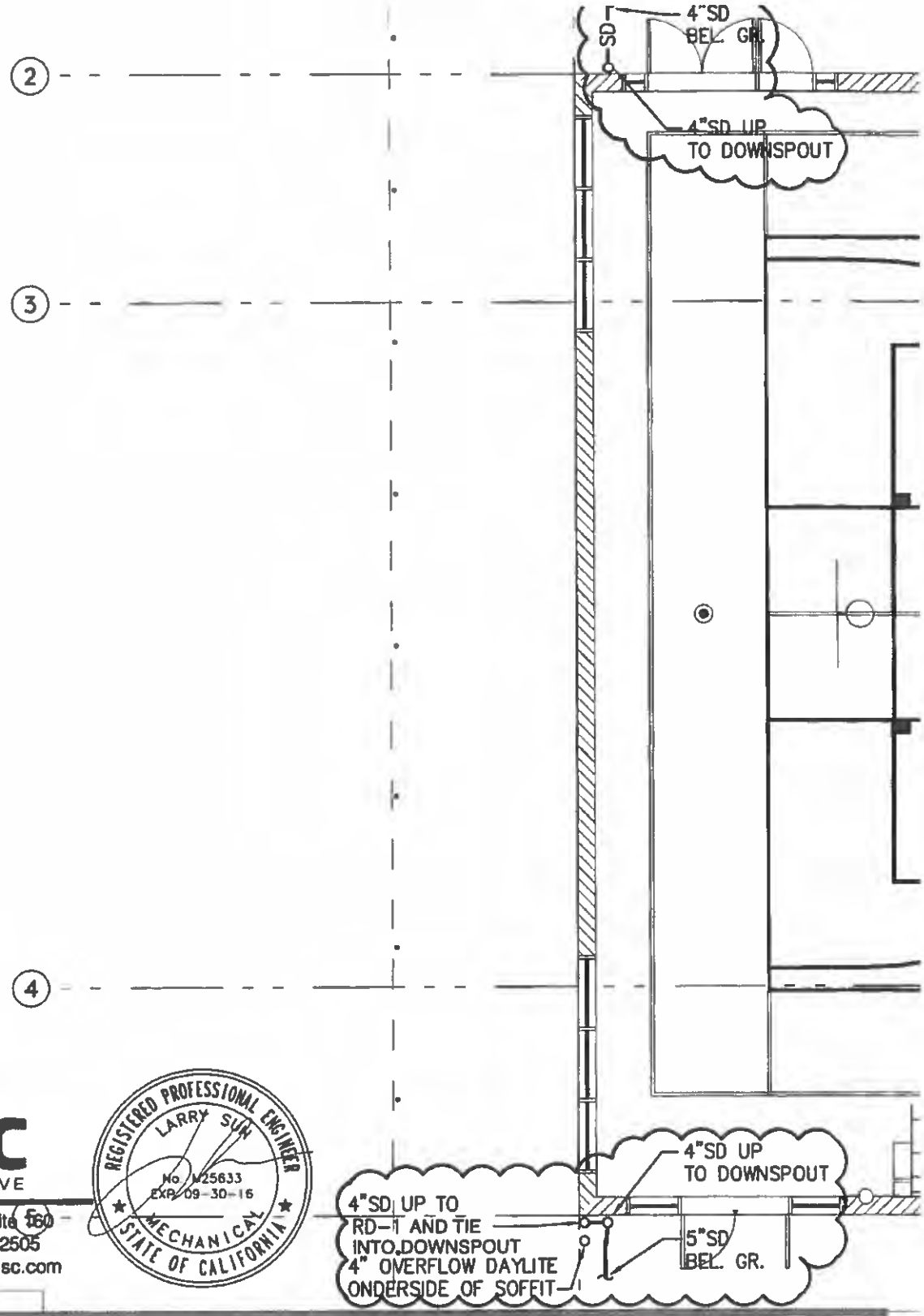

tk1sc
COLLABORATIVE
11870 Pierce Street, Suite 160
Riverside, California 92505
951.299.4160 www.tk1sc.com

REGISTERED PROFESSIONAL ENGINEER
LARRY SUN
No. M25633
EXP. 09-30-16
MECHANICAL
STATE OF CALIFORNIA

pjhm architects
San Diego:
804 Pier View Way #101
Oceanside, CA 92054
p 760.730.5627 f 760.730.5627
Orange County:
24461 Ridge Route Road #100
Laguna Hills, CA 92653
p 949.488.8191 f 949.488.0269

ANTHONY TRAINA SCHOOL
GYMNASIUM AND PERFORMANCE
CENTER BUILDING
JEFFERSON SCHOOL DISTRICT

A#	DATE	SCALE
02-113342	05/08/15	1/8"=1'-0"

DESCRIPTION
P-2.1

SHEET
SKP-4

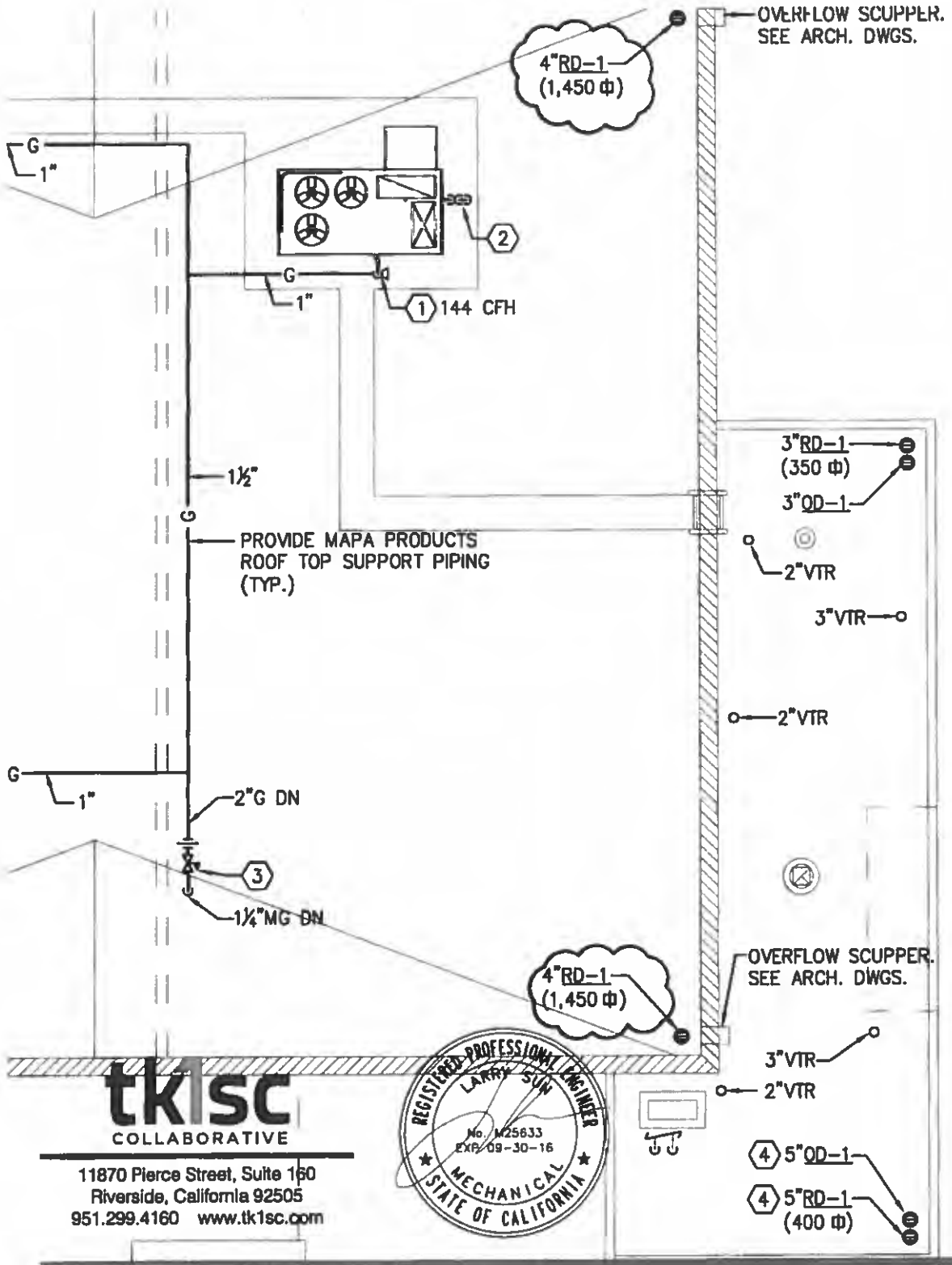

tk1sc
COLLABORATIVE

11870 Pierce Street, Suite 160
Riverside, California 92505
951.299.4160 www.tk1sc.com

REGISTERED PROFESSIONAL ENGINEER
LARRY SUN
No. M25633
EXP. 09-30-16
MECHANICAL
STATE OF CALIFORNIA

pjhm architects

San Diego:
604 Pier View Way #101
Oceanside, CA 92054
p 760.730.5527 f 760.730.5627

Orange County:
24481 Ridge Route Road #100
Laguna Hills, CA 92653
p 949.499.6191 f 949.499.6289

ANTHONY TRAINA SCHOOL
GYMNASIUM AND PERFORMANCE
CENTER BUILDING
JEFFERSON SCHOOL DISTRICT

A#	DATE	SCALE
02-113342	05/08/15	1/8"=1'-0"

DESCRIPTION: P-2.2

SHEET: SKP-5

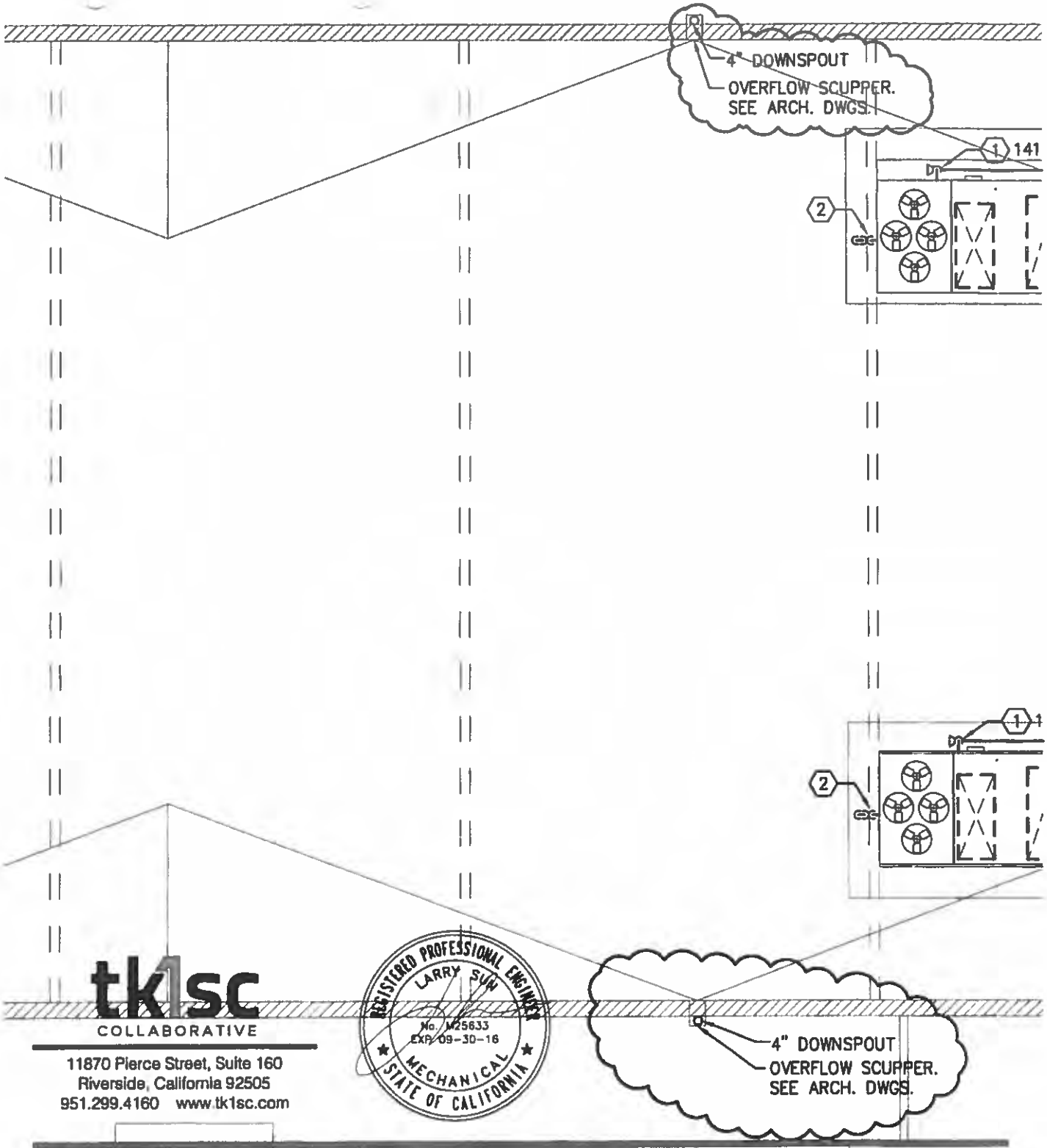

tk1sc
COLLABORATIVE
11870 Pierce Street, Suite 160
Riverside, California 92505
951.299.4160 www.tk1sc.com

REGISTERED PROFESSIONAL ENGINEER
LARRY SUN
No. M25633
EXP. 09-30-16
MECHANICAL
STATE OF CALIFORNIA

pjhm architects
San Diego:
Orange County:

ANTHONY TRAINA SCHOOL GYMNASIUM AND PERFORMANCE CENTER BUILDING

JEFFERSON SCHOOL DISTRICT

A#	DATE	SCALE
02-113342	05/08/15	1/8"=1'-0"

DESCRIPTION: P-2.2

SHEET: SKP-6

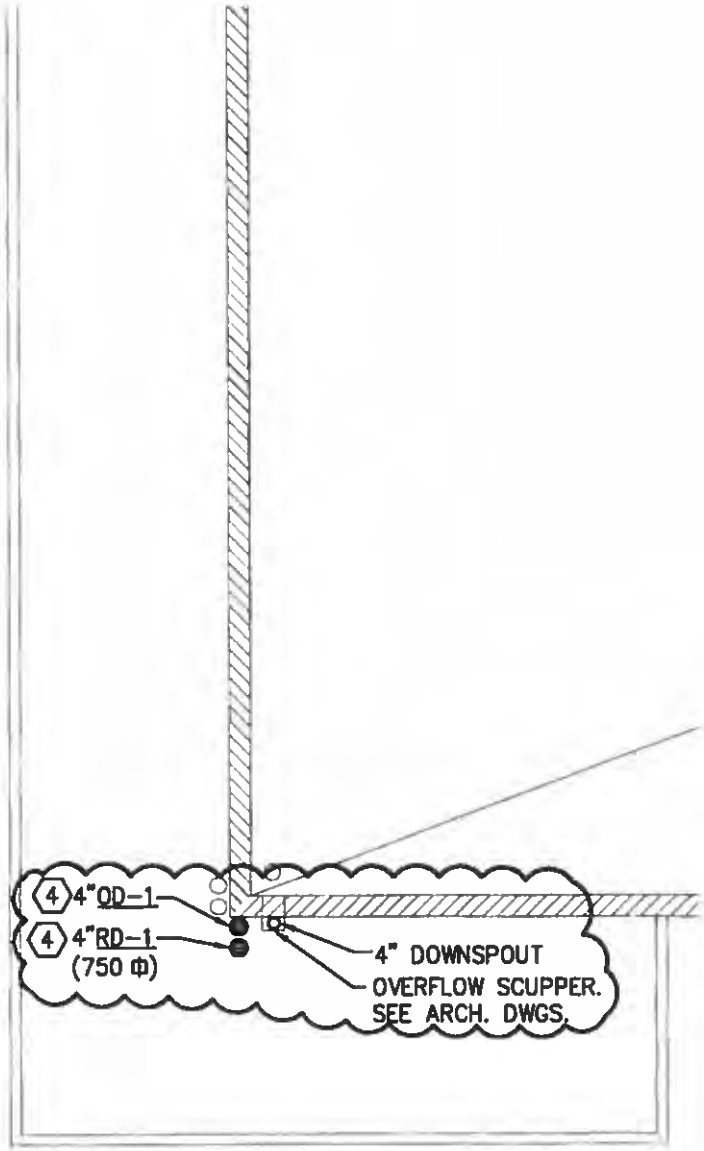

tk1sc
COLLABORATIVE
11870 Pierce Street, Suite 160
Riverside, California 92505
951.299.4160 www.tk1sc.com

REGISTERED PROFESSIONAL ENGINEER
LARRY SUN
No. M25633
EXP. 09-30-16
MECHANICAL
STATE OF CALIFORNIA

pjhm architects
San Diego:
Orange County:

ANTHONY TRAINA SCHOOL
GYMNASIUM AND PERFORMANCE
CENTER BUILDING
JEFFERSON SCHOOL DISTRICT

All	DATE	SCALE
02-113342	05/08/15	1/8"=1'-0"

DESCRIPTION: P-2.2

SHEET: SKP-7

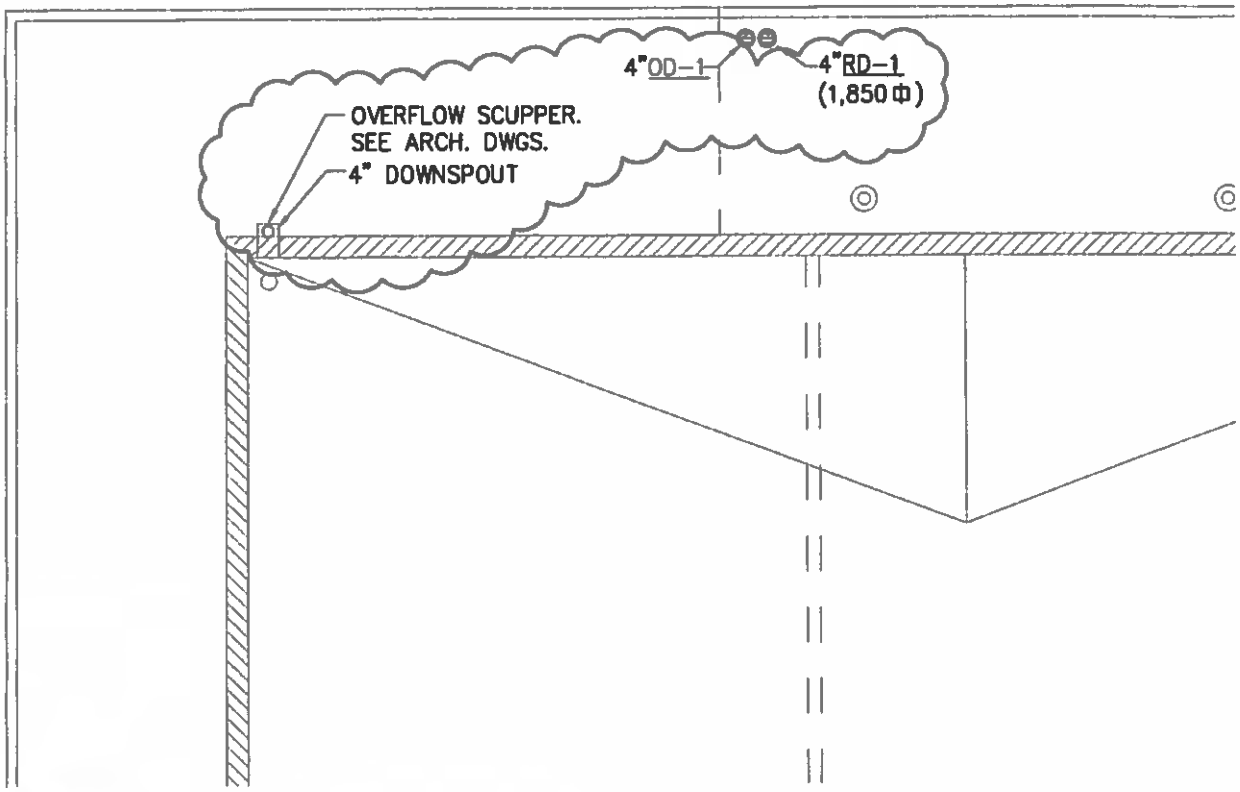

tk1sc
COLLABORATIVE
11870 Pierce Street, Suite 160
Riverside, California 92505
951.299.4160 www.tk1sc.com

REGISTERED PROFESSIONAL ENGINEER
LARRY SUN
No. M25633
EXP. 09-30-16
MECHANICAL
STATE OF CALIFORNIA

pjhm architects
San Diego:
504 Pier View Way #129
Oceanside, CA 92054
p 760.730.9627 f 760.730.9627
Orange County:
24441 Ridge Route, Suite 6160
Laguna Hills, CA 92653
p 949.496.8181 f 949.496.8280

ANTHONY TRAINA SCHOOL GYMNASIUM AND PERFORMANCE CENTER BUILDING JEFFERSON SCHOOL DISTRICT			DESCRIPTION: P-2.2
A#	DATE	SCALE	SHEET:
02-113342	05/08/15	1/8"=1'-0"	SKP-8

letter

DATE: 09/22/15

TO: Jefferson School District
1219 Whispering Wind Dr.
Tracy, CA 95377

ATTN: James Bridges

RE: Anthony Traina Gym and Performance Center
DSA Appl. #: 02-113192
COR #029-R1

Dear James,

We have reviewed the contractor's pricing on COR #029 to furnish and install new ductless split system and associated mechanical, plumbing and electrical at room C03 in lieu of ductwork from HVAC rooftop unit.

We find the pricing of $9,352.00 acceptable and recommend Board of Trustee acceptance.

District Authorization: _____
James W. Bridges

Date: 9/22/15

Thank you.

FROM: Nick Morrissey
pjhm architects
Project Manager

CC: Ramon Parocua, RGM
Kenneth Podany, PJHM
File 13

pjhm·architects
OC// 24461 Ridge Route Drive #100 • Laguna Hills CA 92653 P// 949-496-6191
SD// 804 Pier View Way #103 • Oceanside CA 92054 P// 760-730-5527
PJHM.COM

CHANGE ORDER REQUEST 029r1

Distribution to:
OWNER ☐
ARCHITECT ☐
CONST. MANAGER ☐
CONTRACTOR ☐
FIELD ☐
OTHER ☐

PROJECT: Anthony Traina Gym and Performance Center
4256 Windsong Drive
Tracy, CA 95377

TO: Nick Morrissey, PJHM Architects

Reference: RFI # ____ PCO # ____ ASI# ____
CCA # ____ CCD # 18 IB# ____

COR NUMBER: 029r1

DATE: September 9, 2015
PROJECT No.: JES-14-01
CONTRACT FOR: New Gymnasium
CONTRACT DATE: November 1, 2014

Description of work:
Furnish and install new Ductless Split System and associated mechanical, plumbing and electrical at room C03 in lieu of ductwork from HVAC rooftop unit.

1. Subcontractor Work (mark-up not to exceed 10%)
(Please attached all required backup, quantities, unit cost, etc., associated with work performed.)

1. Costs from Pinasco	$	6,020.00		
2. Costs from Darrale Patrias	$	1,316.36		
3. Costs from Starke Structures	$	651.20		
4. Costs from Yancey Roofing	$	825.00		
5. Costs from Pengilly Masonry to cover opening (Zero)	$	-		
SUBTOTAL	$	8,812.56		
Contractor mark-up on Sub work (not to exceed 5%)	$	440.63		
		TOTAL - 1	$	9,253.19

2. Work Performed by Prime Contractor
(Please attached all required backup, quantities, unit cost, etc., associated with work performed.)

Materials	$	-		
Labor	$	-		
Equipment	$	-		
SUBTOTAL	$	-		
Prime Contractor OH&P (not to exceed 15%)	$	-		
		TOTAL - 2	$	-
		TOTAL - 1 & 2	$	9,253.19
Bond Premium (actual rate, 1.06%)			$	98.08
		TOTAL PROPOSED CHANGE	$	9,352.00

Extension of Contract Time Proposed 0 Days.

Prepared by:
Ramon Parocua

Date September 9, 2015

PINASCO
MECHANICAL CONTRACTOR
PO Box 55287
Stockton, Ca 95205
Plumbing • HVAC • Fire Protection • Repairs
Stockton: (209) 463-7793 Contractors License No. 429901 FAX: (209) 463-3224

Prepared by: Benjamin Pinasco ben@pinascoplumbing.com

CCD #18 HVAC

Date: August 12, 2015

Re: Anthony Trania

Included: We propose to furnish and install a new mini split per submittal that was given. Includes equipment, condensate pump, roof safe, piping, controls, and condensate piping.

Base Bid: $6,880.00

Credit for deleting ducting: ($860.00)

$6,020.00

Exclusions: 1. Permit
2. Electrical

Notice Of Cancellation: You, the buyer, may cancel this transaction at any time prior to midnight of the third business day after the date of this transaction.

Signature of Acceptance: _____ **Date:** _____

DARRALE PATRIAS
ELECTRICAL CONTRACTOR, INC.

2480 N. Walnut Rd. / P.O. Box 1832
Turlock, Ca 95381
(209) 632-6196 Fax (209) 632-4542
Lic No. 348403

August 18, 2015

RGM & Associates
3230 Monument Way
Concord, CA 94518
Attn: Ramon

Re: Anthony Traina Gym

CCD #18

Materials	463.83
Sales tax	37.11
Labor: 8.54 hours	
@ $81.47/hr	695.75
Overhead & profit	119.67
Total cost:	$1316.36

PRICING SHEET

CONTRACTOR: RGM - Trania		ESTIMATE NO.	
NAME OF JOB: ~~Hilton~~ CCB #8		DATE: 8-18	SHEET NO.
LOCATION: UO		ESTIMATED BY	PRICED BY

MATERIAL/UNIT	QUANTITY	MATERIAL PRICE	PER	MATERIAL EXTENSION	LABOR UNIT	PER	LABOR EXTENSION
30A H/D 2P 250V 3R Disc Fused	1			177.83			90
30A H/D 2P 250V Neutral Disc Fused	1			99.06			79
20A FRN Fuse	4	7.59	E	30.36	.08	E	32
3/4 S.T. Flex	5'	1.82.22	C	9.11	4.05	C	20
3/4 S.T. St. Conn	2	3.66.10	C	7.32	.08	E	16
3/4 GRC Coup	4	2.17	E	8.68	.05	E	20
3/4 GRC	4'	1.22.90	C	4.92	4.00	C	16
3/4 Strut Strap	4	1.08	E	4.32	.05	E	20
1 5/8 strut	5'	1.95.00	C	9.75	6.80	C	34
3/4 Bell box	1			4.69			20
20A GFI	1			16.00			25
20A GFI While in use cover	1			9.20			14
3/4 EMT	100'	43.82	C	43.82	3.00	C	3.00
3/4 Emt SS Coup	10	31.92	C	3.19	.05	E	50
3/4 Emt SS Conn	6	32.68	C	1.96	.04	E	24
4sq Box	2	2.90	E	5.80	.20	E	40
4sq Blank	2	.60	E	1.20	.03	E	.06
20A 2P ~~Brake~~ Breaker	1			24.60			15
#12 Thhn	370'	1.25.49	m	46.43	4.50	m	1.67
1/4" Spring nut	10	96.40	C	9.63	.04	E	40
1/2" Strut flex	5	73.29	C	3.66	2.70	C	14
1/2" Jake	4	40.54.16	C	16.22	.03	E	12
				537.34			10.61

PRICING SHEET

CONTRACTOR RGM		ESTIMATE NO.	
NAME OF JOB CCD 18 PCO credit		DATE	SHEET NO.
LOCATION		ESTIMATED BY	PRICED BY

MATERIAL/UNIT	QUANTITY	MATERIAL PRICE	PER	MATERIAL EXTENSION	LABOR UNIT	PER	LABOR EXTENSION
#12 Thhn	100'	12.5419	m	12.55	4.59	m	45
1/2" EMT	10'	23.13	C	2.31	2.75	C	28
1/2" EMT Conn. S.S.	4	15.79	C	.63	.03	E	.12
1/2" " 1 hole	2	3.04	C	.06	.04	E	.08
4sq Box	2	2.90	E	5.80	.20	E	.40
4sq Round & Cover	2	1.35	E	2.70	.03	E	.06
20A Toggle Switch Motor Rated	2	16.26	E	32.52	.20	E	.40
1/2" Flex	6'	25.35	C	1.52	2.70	C	16
1/2" Jake	4	40.5416	C	1.62	.03	E	.2
				(73.51)			(2.07)

EFFGER'S PRINT SHOP 590-3

Starke Structures Inc.
2200 Pine View Way, Suite A
Petaluma, CA 94954

Ph # 707-765-9933
Fax # 707-765-0233
Lic #673132

Change Order #7

Job: Anthony Traina Gym
4256 Windsong Dr.
Tracy, CA 95377

Contractor: RGM & Associates
3230 Monument Way
Concord, CA 94518

Referenc CCD#18

Descript Install framing per 10/S5.6 for 1 new roof top unit.

	Labor	Hours			Rate		Total	
1.	Foreman	1	@	$	90.00	hr	$	90.00
2.	Journyman	4	@	$	80.00	hr	$	320.00
3.	Materials	1	@	$	150.00	ea	$	150.00
4.	Tools/Equip./ Travel	4	@	$	8	hr	$	32.00

Subtotal	$	592.00
10% OH&P	$	59.20
Total	$	651.20

GUDGEL YANCEY ROOFING INC.

5321 84th Street-Sacramento, CA 95826-(916) 387-6900-Fax (916)-387-6904 State Cont. Lic. #589559

DATE: 8/28/2015

PROJECT: Anthony Traina Gym - CCD A #18

SBE CERTIFIED
WBE OWNED

TO: Ramon Parocua

CONTRACTOR: RGM and Associates

SCOPE OF WORK

1) Roof around additional CU.
2) Roof around additonal FU.
3) Roof around pipe penetrations for units.

EXCLUDES SHEET METAL FLASHINGS

BASE BID **$825.00**

Labor: 1 man day at $500.00 per day
Materials: $250.00
Mark Up 10%: $75.00
Total: $825.00

THIS PROPOSAL IS VALID FOR 30 CALENDAR DAYS FOLLOWING THE OPENING OF THE BID.

THIS PROPOSAL/SCOPE LETTER IN ITS ENTIRETY SHALL BECOME PART OF ANY CONTRACT.

RESPECTFULLY SUBMITTED BY:

Rick Cheney
Cell-(916)870-0450
Email: rick@yanceyroofing.com

City of Sacramento & State of California: SBE CERT #GUR5025A10A

letter

DATE: 09/08/15

TO: Jefferson School District
1219 Whispering Wind Dr.
Tracy, CA 95377

ATTN: James Bridges

RE: Anthony Traina Gym and Performance Center
DSA Appl. #: 02-113192
COR #030

Dear James,

We have reviewed the contractor's pricing on COR #030 to relocate existing light pole and footing shown to remain, north 3' feet from block wall and install second relocated light pole in contract to a new location, per email dated August, 17, 2015.

We find the pricing of $4,557.00 acceptable and recommend Board of Trustee acceptance.

District Authorization: _____
James W. Bridges

Date: 9/8/15

Thank you.

FROM: Nick Morrissey
pjhm architects
Project Manager

CC: Ramon Parocua, RGM
Kenneth Podany, PJHM
File 13

pjhm·architects
OC: 24461 Ridge Route Drive #100 • Laguna Hills CA 92653 P: 949-496-6191
SD: 804 Pier View Way #103 • Oceanside CA 92054 P: 760-730-5527

CHANGE ORDER REQUEST 030

Distribution to:
- OWNER ☐
- ARCHITECT ☐
- CONST. MANAGER ☐
- CONTRACTOR ☐
- FIELD ☐
- OTHER ☐

PROJECT: Anthony Traina Gym and Performance Center
4256 Windsong Drive
Tracy, CA 95377

TO: Nick Morrissey, PJHM Architects

Reference: RFI # ____ PCO # _____ ASI# _____

CCA # _____ CCD # _____ IB# _____

COR NUMBER: 030

DATE: September 2, 2015

PROJECT No.: JES-14-01

CONTRACT FOR: New Gymnasium

CONTRACT DATE: November 1, 2014

Description of work:

Relocate existing site light pole and footing shown to remain, north 3' feet from block wall and install the second relocated light pole in Contract to a new location per email dated August 17, 2015.

1. Subcontractor Work (mark-up not to exceed 10%)

(Please attached all required backup, quantities, unit cost, etc., associated with work performed.)

1. Costs from Patrias Electric	$ 4,294.15		
SUBTOTAL	$ 4,294.15		
Contractor mark-up on Sub work (not to exceed 5%)	$ 214.71		
	TOTAL - 1	$	4,508.86

2. Work Performed by Prime Contractor

(Please attached all required backup, quantities, unit cost, etc., associated with work performed.)

Materials	$ -		
Labor	$ -		
Equipment	$ -		
SUBTOTAL	$ -		
Prime Contractor OH&P (not to exceed 15%)	$ -		
	TOTAL - 2	$	-
	TOTAL - 1 & 2	$	4,508.86
Bond Premium (actual rate, 1.06%)		$	47.79
TOTAL PROPOSED CHANGE		$	4,557.00

Extension of Contract Time Proposed 0 Days.

Prepared by:

Ramon Parocua

Date September 2, 2015

DARRALE PATRIAS
ELECTRICAL CONTRACTOR, INC.

2480 N. Walnut Rd. / P.O. Box 1832
Turlock, Ca 95381
(209) 632-6196 Fax (209) 632-4542
Lic No. 348403

August 24, 2015

RGM & Associates
3230 Monument Way
Concord, CA 94518
Attn: Ramon

Re: Anthony Traina Gym-PCO 007

Relocate (2) light poles.

Materials	1,086.02
Sales tax	86.88
Labor: 33.52 hours	
@ $81.47/hr	2,730.87
Overhead & profit	390.38
Total cost:	$4,294.15

PRICING SHEET

CONTRACTOR RGM		ESTIMATE NO.	
NAME OF JOB Irvine - site lighting		DATE 8-18	SHEET NO.
LOCATION		ESTIMATED BY T.B.	PRICED BY

MATERIAL/UNIT	QUANTITY	MATERIAL PRICE	PER	MATERIAL EXTENSION	LABOR UNIT	PER	LABOR EXTENSION
Concrete	1 yd			2000.00	2.00		2.00
anchor Bolts	1 set			250.00	1.50		1.50
Rebar Cage	1			300.00	1.50		1.50
3/4 PVC	40'	27.25	c	10.90	2.30	c	.92
Trench & Backfill	30'			100.00			16.00
R/R ea. light pole	—			—	2.00		2.00
#10 Thhn	600'	1.66.87	m	100.12	6.00	m	3.60
Backhoe	—			—			6.00
Demo of ex. concrete foundation	—			50.00			4.00
haul off & disp. of concrete				75.00			6.00
				1086.02			33.52

SEEGER'S PRINT SHOP 540.3

Ramon Parocua

From: Nick Morrissey [nick@pjhm.com]
Sent: Monday, August 17, 2015 2:40 PM
To: Jeff Gilchrist
Cc: Kenneth Podany; Paulina Saucedo; Marc Hunter; Ramon Parocua; Tom Beattie (beattietm@gmail.com); Michele Neuhuys
Subject: Re: Traina Site Lighting

Jeff,

We were just looking for pricing right now and are not going to put together a CCD until there is actual direction to give. See attached sketch for the what we would like a cost proposal for…

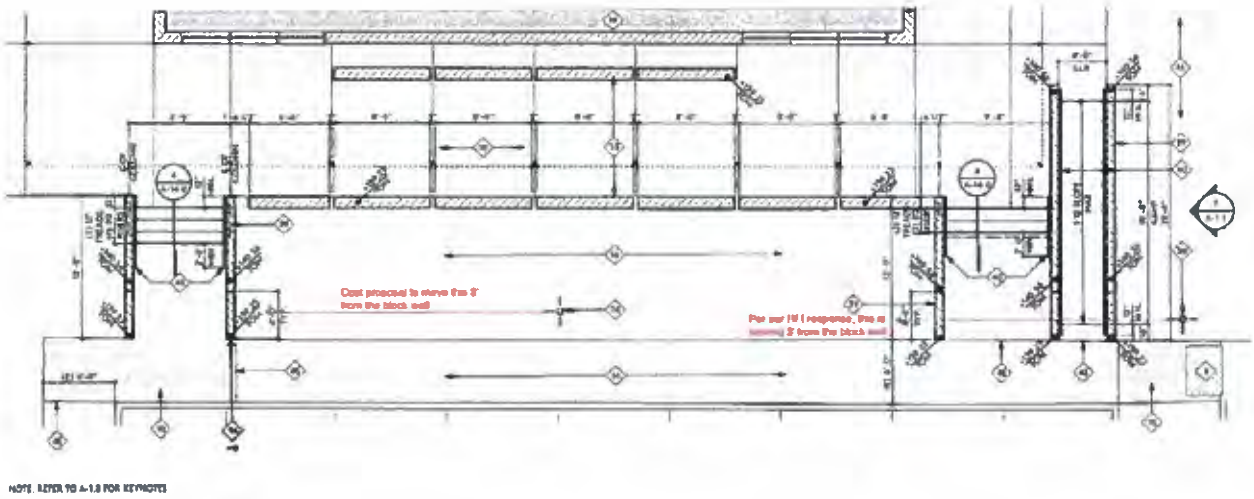

Thanks,

Nick Morrissey • LEED-AP
PROJECT MANAGER
nick@pjhm.com

On Aug 17, 2015, at 11:12 AM, Jeff Gilchrist <Jeff@rgmassociates.com> wrote:

Nick,

I know we talked about the relocation of the site lighting at our meeting, but I need a formal CCD for this work showing the location of the relocated light so that we can proceed with pricing this work.

Can you shoot us a CCD whenever you can.

Jeff

Jeffrey J. Gilchrist

RGM and Associates Inc.
3230 Mounument Way